UT281F
10000A Flex Clamp
User Manual

uni-trend.vn

Preface

Thank you for purchasing a brand-new Uni-Trend instrument, in order to use this instrument correctly, please read the full text of this manual carefully before use, especially the "Safety Information" section.

If you have read the full text of this manual, it is recommended that you keep it in a safe place, preferably with the instrument or in a place where you can access it at any time, so that you can refer to it in future use.

Limited warranties and liability

The Company warrants that this product will be free from any defects in materials and workmanship for a period of one year from the date of purchase. This warranty does not apply to damage caused by accident, negligence, misuse, modification, contamination and abnormal operation or handling. The Distributor is not entitled to any other warranties in the name of the Company. If warranty service is required during the warranty period, please contact the nearest authorized service center to obtain the product return authorization information, and then send the product to the service center with a description of the product problem.

This guarantee is your sole remedy. Otherwise, the Company disclaims all warranties, express or implied, such as those applicable to a particular purpose. The Company shall not be liable for any special, indirect, incidental or consequential damages or losses arising from any cause or presumption, and the above limitations and provisions of liability may not apply to you because some states or countries do not allow limitations on implied warranties and incidental or consequential damages.

uni-trend.vn

1. Overview

UT281F is a safe and reliable 0mA to 10000A AC true RMS digital Rosettes coil clamp meter (hereinafter referred to as the flexible clamp meter). The overall circuit design of the Meter takes the large-scale integrated integral A/D converter as the core, and adopts a large-diameter Rogowski coil with a length of 1100mm (43 inches), which is convenient for measurement in any power scenario. This Meter includes all the functions of a conventional clamp meter (such as AC and DC voltage, resistance, frequency, AC current, surge, power, phase measurement, etc.). It is also equipped with functions such as automatic identification of AC and DC voltages, data hold, data storage, low battery indication, backlight and auto-off. The full-range overload protection circuit and unique appearance design make it a new generation of electrical measuring instrument with superior performance and greater practicality. It can be used as a dedicated measuring tool for the detection, maintenance and repair of various distribution stations, metallurgy, communication, manufacturing, petroleum, national defense, power, electrical engineering, photovoltaic stations, circuit and power equipment, addressing more measurement requirements in factory automation, power distribution, and electromechanical systems.

2. Features

1） Lightweight; easy to operate with one hand or at heights.
2） All-round anti-misoperation protection, capable of withstanding an energy impact of up to 30KV, and equipped with overvoltage and overcurrent alarm.
3） Includes all the functions of a conventional clamp meter, such as current, voltage, frequency, resistance, power, energy, phase Angle and other measurement configurations
4） The current measurement is designed with automatic ranges of 1000mA, 10A, 100A, 1000A, and 10KA, with a frequency response of 45Hz to 500Hz, and it also features surge measurement functionality.
5） Overvoltage and overcurrent alarm
6） Large area of red backlight as a warning
7） It has functions such as data hold, storage, viewing and deletion
8） Dual display function: AC voltage - frequency (auxiliary display), flexible coil AC current - frequency (auxiliary display)
9） The circuit is set with an automatic power-saving function. In the auto-off state, the power consumption is less than 50uA, effectively extending the battery life to 200 hours.

Please read carefully the contents related to "Safety" and "Warning" in this manual and strictly abide by all the precautions of the warnings.

⚠Warning: Please read carefully the “Safety Information” section before use.

uni-trend.vn

3. Accessories

This user manual includes relevant safety information and warning information, please read the relevant content carefully and strictly follow all warnings and precautions. Open the box, take out the Meter, and check the following accessories. Please contact your supplier immediately if any accessory is missing or damaged.

1. Quick start guide：1 pc
2. Test leads：1 pair
3. 1.5V AAA batteries：3 pcs

4. Safety Information

Please pay attention to the "Warning signs and warning information". A warning indicates a situation or action that poses a danger to the user and may cause damage to the meter or device under test. This Meter is certified according to IEC/EN61010-1, 61010-2-032, and electromagnetic radiation protection EN61326-1 safety standard, meets the safety standards of double insulation, CAT III 1000V, CAT IV 600V, and pollution level 2, and is used indoors. Failure to follow the instructions may weaken or lose the protection provided to you.

1. Check the meter and test leads before use to prevent any damage or abnormal phenomenon. Please do not use if you find any abnormal conditions, such as exposed test lead, damaged case, abnormal display, etc.
2. It is forbidden to use the meter without a proper cover, otherwise there is a risk of electric shock.
3. If the test lead is damaged, please replace with a test lead of same model or specification.
4. During measurement, do not touch exposed wires, connectors, unused inputs, or circuits.
5. Use caution when measuring voltages above 30V DC or 30V AC. Do not hold the test lead over the finger guard to prevent electric shock.
6. Never apply more voltage or current than indicated on the meter between terminals, or between any terminal and ground
7. The functional switch must be set in the correct position during measurement. Before switching the position, please disconnect the test leads from the circuit under test. It is forbidden to switch the position during measurement to prevent damage to the Meter.
8. Before performing in-circuit resistance measurement, all power in the circuit where the device under test is located must be cut off and all capacitors must be discharged completely
9. Only test leads with the same rated voltage, frequency, category and rated current as the Meter, as well as those approved by the safety certification body, can be used.
10. Before opening the battery cover, please remove the test leads from the Meter.
11. When using the probe, please hold your finger behind the probe finger guard.
12. Do not store or use the instrument in environments with high temperature, high humidity, flammability, explosiveness or strong electromagnetic fields.
13. Do not alter the internal wiring of the Meter without authorization, otherwise it will damage the Meter and pose danger.
14. When the LCD display shows the symbol “▭”, please replace the battery in time to ensure

uni-trend.vn

measurement accuracy.

15. The power supply should be turned off in time after the measurement is completed. When not in use for a long time, please remove the battery.
16. To ensure the Meter functions normally, please measure the known intrinsic voltage or current of the Meter before use.
17. Please use according to the IEC/EN/UL 61010-031 standard and under the conditions of same or higher electrical specification.
18. Do not use at frequencies exceeding the rated value.

5. Electrical Symbols

⧈	Double insulated		Insufficient battery power
⏚	Grounding	⎓	AC (Alternating Current)/DC (Direct Current)
⚠	Warning	⚠	Warning
~	AC (Alternating Current)	CE	Complies with European Union directives.
⎓	DC (Direct Current)		Battery
🔒/🔓	Coil locked/unlocked		
	Do not apply around or remove from UNINSULATED HAZARDOUS LIVE conductors, which may render electric shock, electric burn, or arc flash		
	Conforms to UL STD 61010-1, 61010-2-032, and certified to CSA STD C22.2 NO.61010-1, 61010-2-032		
	Do not dispose of the device and its accessories in the trash, please dispose of them properly in accordance with local regulations.		
CAT Ⅲ	It is applicable to test and measuring circuits connected to the distribution part of the building's low-voltage MAINS installation.		
CAT IV	It is applicable to test and measuring circuits connected at the source of the building's low-voltage MAINS installation.		

uni-trend.vn

6. General Characteristics

1. Maximum voltage between the signal input terminal and the COM terminal: For details, please refer to the input voltage description for each range.
2. Display: 6000 counts
3. The display updates 2 to 3 times per second
4. Range: Automatic
5. Polarity display：Automatic
6. Overrange indication: “OL”
7. Test position error: When measuring current, if the source to be measured is not placed at the center of the coil, additional reading errors will occur. Please refer to the descriptions about additional errors at Areas A, B, and C in “Technical Specifications” section.

8. Impact resistance: Can withstand a drop impact from a height of 1 meter.
9. Low voltage indication: ≤3.6V approx.
10. Power supply: 3 AAA 1.5V batteries
11. Auto-off function: The Meter will automatically power off if no button is pressed within approximately 15 minutes. This function can also be turned off as needed.
12. Operating temperature: 0℃～40℃ (32℉～104℉)
13. Storage temperature: -10℃～50℃(14℉～122℉)
14. Relative humidity: 0℃～30℃ below: ≤75%; 30℃～40℃: ≤50%
15. Operating altitude: ≤2000m
16. Electromagnetic compatibility: As per EN61326-1 and EN61326-2-2
17. Weight: 305±5g (including batteries)
18. Safety standard: IEC 61010-1: CAT III 1000V / CAT IV 600V
19. Pollution degree: 2
20. Indoor/Outdoor use

7. External Structure (Figure 1)

1. Coil lock
2. LCD display
3. Functional buttons
4. Functional switch
5. Input terminal
6. Fixing screw for battery compartment

uni-trend.vn

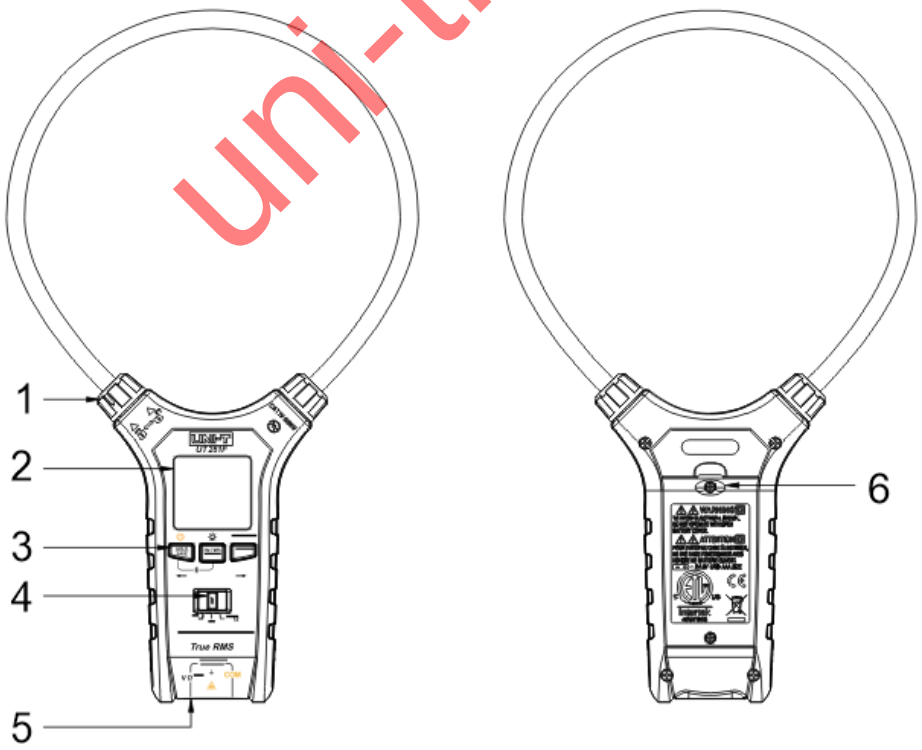

Figure 1

8. LCD Display (Figure 2)

Figure 2

Symbols	Descriptions
⚠	AC/DC voltage is higher than 30V
H	Data hold
✱	Bluetooth connection
m:s	Timing unit of electric energy (minutes: seconds)
h:m	Timing unit of electric energy (hours: minutes)
RECALL	Data viewing
FULL	Data storage is full at current position
PF	Power factor measurement
–	Negative reading
AC	AC measurement
DC	DC measurement
▭	Low battery
AUTO	Automatic range
APO	Auto-off
MkΩ	Units of resistance: ohm, kiloohm, megohm
V	Unit of voltage: volt
mkA	Units of current: milliampere, kiloampere, ampere
kWh	Units of electric energy: kilowatt-hour, watt-hour
kVVAr	Units of power: kVV, kVA, kVAr

uni-trend.vn

INRUSH	Inrush measurement
kHz	Units of frequency: kilohertz, Hertz
•)))	Continuity measurement (symbol only, function not available)
%	Unit of duty cycle (symbol only, function not available)
●	Unit of phase angle: degree

9. Functional Switch and Buttons

Positions	Descriptions
V ⊥	AC/DC voltage measurement
W	Power measurement
⊥ A/Ω	AC current/resistance measurement

Instructions for button operation:
Short press: Press the button for <2s
Long press: Press the button for ≥2s

1. ⏻ HOLD SAVE:
   1）Short press to hold and save data. (In the data hold mode, the screen displays "H" and other buttons are inactive.)
   2）Long press to turn on/off the Meter.

2. RECALL SELECT:
   1) Voltage position: Short press to cycle through ACDCV->ACV->DCV.
   2) Power position: Short press to cycle through kW->kVA->kVAr->PF.
   3) Current/Resistance position: Short press to cycle through ACA->R.
   4) Electric energy measurement: Short press to start/stop/reset and restart the measurement.
   5) Inrush current measurement: Short press for reset measurement.
   6) Long press to view the stored data at current position. Arrow direction (scroll through stored data in stepping mode)

3. ☼ Hz / Wh INRUSH:
   1） Long press to turn on/off the backlight function.
   2） Voltage position: Short press to enter/exit Hz(ACV)
   3） Power position: Short press to enter/exit electric energy measurement.
   4） Current/Resistance position: Short press to enter/exit inrush current measurement.
   5） Data viewing function: Short press to delete current data and long press to delete all data at current position.

uni-trend.vn

4. HOLD SAVE + Hz / Wh INRUSH:

1) In power-off state, long press HOLD SAVE and Hz / Wh INRUSH simultaneously to power on the Meter and turn on the Bluetooth function.

5. HOLD SAVE + RECALL SELECT:

1） In power-off state, long press HOLD SAVE and RECALL SELECT simultaneously to power on the Meter and to disable the auto-off function (“APO” is not displayed).

10. Operating Instructions

Please pay attention to check the built-in AAA (1.5V x 3) batteries before use. If the battery power is insufficient after the Meter is turned on, the "▭" symbol will be displayed, please replace the batteries in time. Please also pay attention to the warning symbol "⚠" next to the socket of the test lead, which is a warning that the measured voltage should not exceed the indicated value to ensure the safety of the measurement!

1. AC/DC voltage and frequency measurement (Figure 3)

1) Set the functional switch to the AC voltage/DC voltage position.
2) The default position is the AC/DC voltage automatic recognition position. At this position, the Meter automatically recognizes the AC and DC voltages in the measured signal, compares the effective values of DC and AC, and displays the part with the larger effective value. This function is activated when VAC input is greater than about 0.6 Vrms or VDC is greater than about 0.6 V / VDC is less than about -0.6 V, otherwise the interface displays “- - -”.
3) To measure DC voltage, short press the "SELECT" button to enter the DC voltage position. To measure AC voltage, short press the "SELECT" button again to enter the AC voltage position.
4) Short press the "Hz" button in the AC voltage position to activate the voltage frequency measurement function.
5) Insert the red test lead into the red (V) jack and the black test lead into the black (COM) jack. Then, touch the test leads to both ends of the voltage to be measured respectively (in parallel with the load).
6) The Meter will automatically select the appropriate range. The main display will show the true RMS value of the AC voltage, and the auxiliary display will show the frequency.

uni-trend.vn

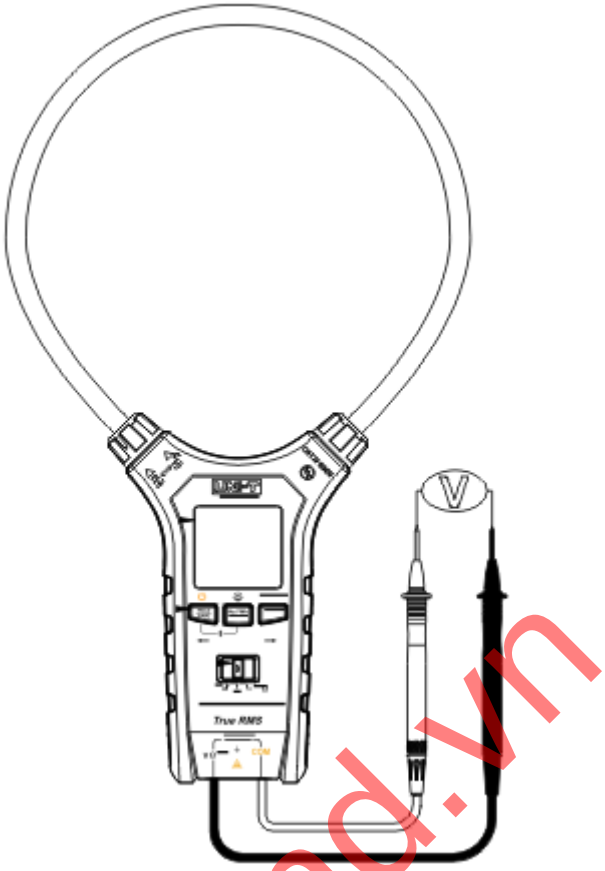

Figure 3

⚠ Warning:

*.When measuring high voltage, please pay special attention to safety to avoid electric shock!

*.Before use, please measure a known voltage to confirm whether the Meter functions normally!

uni-trend.vn

2. AC current measurement

1) Set the functional switch to the AC current/resistance position. The default position is AC current position.
2) Rotate the coil lock to unlock, completely clamp the coil around the conductor to be measured, and then rotate the lock to lock the coil. (Note that the coil must be fully closed. See Figures 4.1 and 4.2.)
3) The Meter can only measure one current conductor at a time. If two or more current conductors are measured simultaneously, the reading will be incorrect. (See Figure 4.3)
4) The Meter will automatically select the appropriate range. The main display will show the true RMS value of the AC current, and the auxiliary display will show the frequency.
5) Long press "INRUSH" button in the AC current position to select surge current measurement. If an appliance is started at this time, the instantaneous starting current of the appliance can be measured.
6) Please do not perform the following improper operations. (see Figure 4.4)

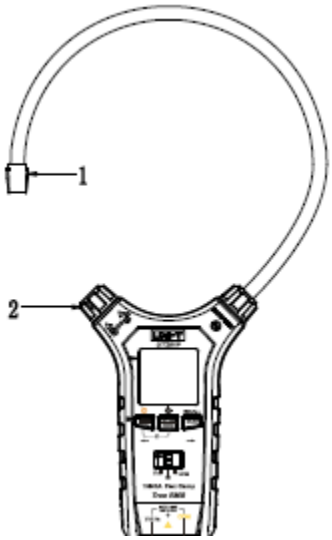

Figure 4.1

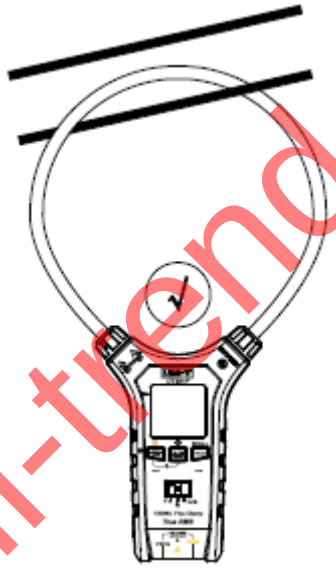

Figure 4.2

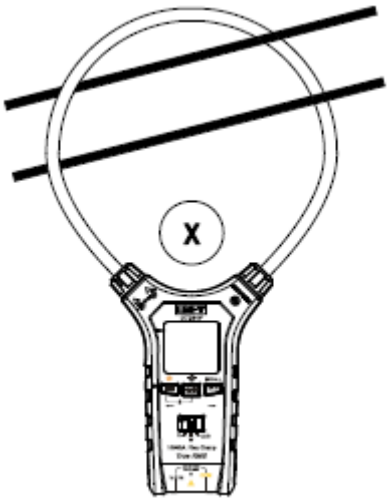

Figure 4.3

uni-trend.vn

Figure 4.4

⚠ **Warning:**

*.When using the AC current measurement function, do not input voltage signals from the voltage measurement input port, as this may cause abnormal current readings and affect the normal use of the current measurement function.

*.Due to the high sensitivity of the coil, please keep the coil stationary during measurement and do not shake it, otherwise it will cause changes to the reading, especially in the 1000mA range.

*.To ensure the accuracy of the measurement data, the conductor to be measured must be placed in the center of the coil. If it is not placed in the center position of the coil, additional reading errors will occur. Please refer to the “Technical Specifications” regarding the additional errors at Areas A, B, and C.

*.When the Meter shows "OL", do not continue the test and replace with a meter with larger range. If you test for a long time, there is a risk of damaging the Meter.

*.Please power off the device to be measured before installing or disassembling the coil. When operating hazardous live equipment, safe operating procedures should be adopted.

*.If there are accessible dangerous moving parts in the device being measured, personal protective equipment should be used.

*.An error of 1.5% (Area A) is added when measuring with the coil wound multiple turns around the conductor.

3. Resistance measurement (Figure 5)

1) Set the functional switch to the AC current/resistance position. The default position is AC current position.
2) Short press the SELECT button to switch to the resistance measurement function.
3) Touch the test leads to both ends of the load to be measured respectively.
4) The Meter will automatically select an appropriate range and directly read the resistance value of the measured load from the screen.

uni-trend.vn

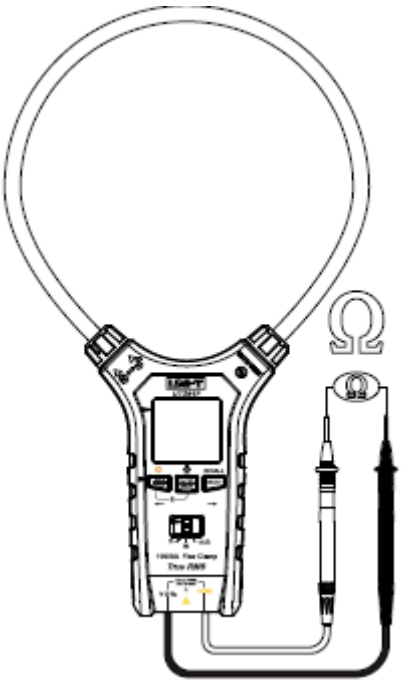

Figure 5

⚠ **Warning:**

*. Before in-circuit resistance measurement, to prevent damage to the instrument and injury to the user, all power supplies in the circuit to be measured must be turned off, and all residual charges on the capacitors must be discharged completely.

*. If the resistance value of shorted test leads is not less than 0.5Ω, please check whether the test leads are loose or have other abnormalities.

*. If the measured resistor is open-circuit or its resistance value exceeds the range of the Meter, the display will show "OL".

*. When measuring low resistance, the test leads may cause a resistance measurement error of 0.1Ω to 0.2Ω. To obtain an accurate value, the final resistance value can be obtained by subtracting the resistance value of shorted red and black test leads from the measured resistance value.

*. When measuring high resistance, it may take several seconds for the reading to stabilize, which is a normal phenomenon.

*. Do not input a voltage higher than 30V for DC or AC to avoid personal injury.

4. Power measurement (Figure 6)

1) Set the functional switch to the power position. The default position is active power position.

2) Rotate the coil lock unlock, completely clamp the coil around the current conductor of the load to be measured, then rotate the lock to lock the coil. The current direction is from top to bottom (top on the panel and bottom on the bottom cover). The Meter can only measure one current conductor at a time. If two or more current conductors are measured simultaneously, the measurement reading will be incorrect.

3) Insert the red test lead into the red (V) jack and the black test lead into the black (COM) jack. Then, touch the test leads to both ends of the load to be measured respectively (connect them in parallel to the load)

uni-trend.vn

4) The Meter will automatically select an appropriate range and directly read the measured value from the screen. Press the SELECT button to cycle through active power, apparent power, reactive power, power factor and phase angle.

5) Short press the “WH” button in the power position to enable the energy measurement function.

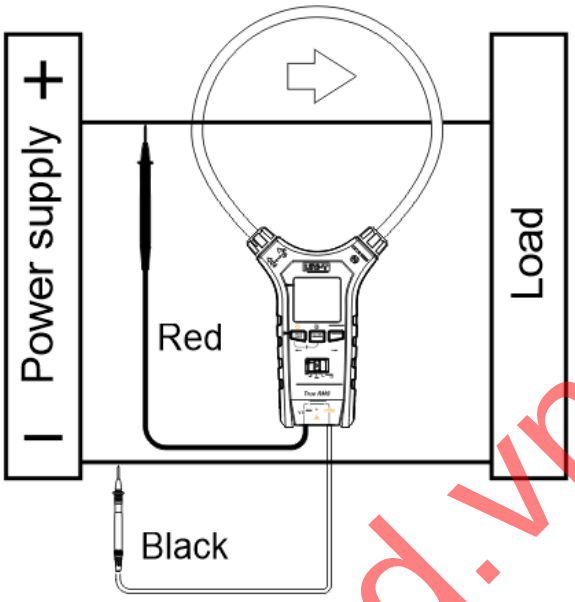

Figure 6

⚠ **Warning:**

*. When measuring high voltage, please pay special attention to safety to avoid electric shock!

*. When measuring the phase angle, which is referenced to the voltage, ensure you correctly identify the direction of the current in the conductor and the polarity of the load voltage. These factors will affect the measured phase angle, which in turn determines the sign (positive or negative) of the active power and reactive power.

*.When the measured voltage exceeds the safe voltage of 30VAC, the Meter will display a high-voltage warning symbol "⚠". When the measured voltage exceeds 600VAC, the red backlight will flash. When the measured voltage exceeds 1000VAC, the buzzer will sound.

*.The Meter only supports the measurement of single-phase power.

*. To ensure the accuracy of the measurement data, the conductor to be measured must be placed in the center of the coil. If it is not placed in the center position of the coil, additional reading errors will occur. Please refer to the “Technical Specifications” regarding the additional errors at Areas A, B, and C.

*. When measuring high power, it is normal to take several seconds for the reading to stabilize.

* .If there are accessible dangerous moving parts in the device being measured, personal protective equipment should be used.

*.A compensation of 3° is added when the measured signal is at 0°, ±180°, or ±360°.

*. An error of 1.5% (Area A) is added when measuring with the coil wound multiple turns around the conductor.

uni-trend.vn

5. Data hold/storage/viewing/deletion

1) Data hold and storage: During measurement, short press the "HOLD SAVE" button to hold the current measurement data (with the symbol "H" displayed on the LCD) and automatically number and store the measurement data. Short press the "HOLD SAVE" button again to cancel the data hold.
2) During measurement, long press the "RECALL SELECT" button simultaneously to enter the data viewing interface (with “RECALL” displayed). Cycle through the stored data according to the arrow direction on the panel.
3) Data deletion: On the data viewing interface, long press the "INRUSH Wh" button. The LCD will display "NULL" and the buzzer will sound, indicating that all stored data has been deleted. To delete a single data record, select the data to be deleted and short press the button "INRUSH Wh". After 1 second, the main display will show " - - - - " and the auxiliary display will show the number of the deleted data record, indicating that the selected data record has been successfully deleted.

⚠ **Warning:**

*. 1050 entries of data are stored. Each position has a capacity of 350 entries of data. When the LCD displays "FULL", it indicates that the current position's storage is full. All data must be cleared before continuing storage.

*. Upon entering the data viewing interface, the LCD flashes "NULL", the buzzer beeps twice, and then the Meter automatically exits the data viewing interface, indicating that there is no stored data in the current position.

*. When storing and viewing the data of AC voltage/current, the LCD auxiliary display first shows the number for approximately 1 second, then automatically switches to display the frequency value of the current AC voltage/current. When measuring DC voltage, resistance, frequency, and surge current, the LCD auxiliary display shows the number for approximately 1 second, and then automatically turns off.

6. Other functions

1) Auto-off: If there is no operation for 15 minutes during measurement, the Meter will automatically power off and enter the energy-saving state. In the auto-off state, you need to long press the "HOLD SAVE" button again before restarting the Meter. To disable the auto-off function, long press the "HOLD SAVE" and "RECALL SELECT" buttons in the off state to turn on the Meter. When the character "APO" on the LCD disappears, the auto-off function is cancelled. The auto-off function can be restored by restarting the Meter.
2) High voltage alarm: In the ACV/DCV position and kW/kVA/kVar position, when the amplitude of the measured voltage is ≥30V or exceeds the range and shows OL, the LCD displays the high-voltage warning symbol "⚠".
3) High-voltage over-range alarm: In the ACV/DCV position and kW/kVA/kVar position, when the amplitude of the measured voltage is ≥600V, the red backlight flashes when

uni-trend.vn

the white backlight is off. When the white backlight is turned on, the red and white backlights alternate flashing.

4) "OL" display for voltage and current: ACV/DCV>1010V ; W>3600kW/VA>3600kVA/Var>3600kVAr;ACA>10.10kA;R>60MΩ
5) Low voltage detection: When the battery voltage is ≤ about 3.7V, the low voltage symbol "▭" will be displayed.
6) Under-voltage shutdown function: When the battery voltage is ≤ about 3.6V, the battery under-voltage symbol "▭" is displayed, and the "Lbt" interface appears on the LCD screen and lasts for several seconds. Then, the buzzer emits a continuous "beep" sound three times. After that, the Meter automatically shuts down. The battery status update cycle is about 10 seconds.
7) Dual display function: AC voltage - frequency (auxiliary display), coil AC current - frequency (auxiliary display).
8) Buzzer: When any button is pressed or the functional switch is toggled, if the functional button is active, the buzzer will emit a "Beep" sound (about 0.25 seconds). If the button is inactive, it will emit three short consecutive sounds. When measuring voltage or current beyond the range, the buzzer will emit intermittent "Beep" sound as a warning.
9) Long press the "Hz/Wh/INRUSH" button to turn on/off the backlight function.

11、Technical Specifications

Accuracy ± (a% of reading + b counts); guaranteed for one year
Ambient temperature: 0℃～40℃ (32℉～104℉)
Relative humidity: ≤75%

⚠ **Warning:**

- Temperature condition of accuracy: For 18°C to 28°C, the fluctuation range of ambient temperature is stable within ±1°C. At a temperature < 18 °C or > 28 °C, a temperature coefficient error of 0.2 x (specified accuracy)/°C is added.

1. Automatic identification of AC/DC voltage

Range	Resolution	Accuracy
6.000V	0.001V	±(1.2%+3)
60.00V	0.01V	
600.0V	0.1V	
1000V	1V	

2. DC voltage measurement

Range	Resolution	Accuracy
6.000V	0.001V	±(0.8%+2)
60.00V	0.01V	
600.0V	0.1V	
1000V	1V	±(1.0%+2)

*.The input voltage impedance is approximately 10MΩ. When the maximum is ≥1010V, "OL"

uni-trend.vn

is displayed.
*.Overload protection: 1000Vrms (DC/AC)
*.Accuracy guarantee range: 5%～100% of range
*.The offset under open circuit condition is ≤2 counts; the reading is zero when performing input under short circuit condition.

3. AC voltage measurement

Range	Resolution	Accuracy
6.000V	0.001V	±(1.2.%+3)
60.00V	0.01V	
600.0V	0.1V	
1000V	1V	

*.The input voltage impedance is about 10MΩ. When the maximum is ≥1100V, "OL" is displayed.
*.Frequency response: 50Hz～500Hz; RMS value of sine wave (response of true RMS value)
*.Overload protection: 1000Vrms (DC/AC)
*.Accuracy guarantee range: 10%～100% of range
*.The offset under open circuit condition is ≤10 counts; the reading is ≤3 counts when performing input under short circuit condition.

4. AC current measurement

5.

Range	Resolution	Accuracy	Remark
100mA	1mA	±(2.0%+5)	
1000mA	1mA	±(2.5%+5)	
10.00A	0.01A	±(2.5%+10)	The specifications in this table are used for center position. As for the specifications for Areas A, B, and C, please see the table below.
100.0A	0.1A		
1.000kA	0.001kA	±(3.0%+5)	
10.00kA	0.01kA	±(3.5%+5)	
Inrush current measurement	Measurement range: 5.00A~1000A	±(3.5%+5)	

uni-trend.vn

The additional accuracy for the best measurement at the center position (in the absence of other external electric or magnetic fields)	50mm (1.97 inches)	The accuracy at the current range is increased by 1.5%	Area A	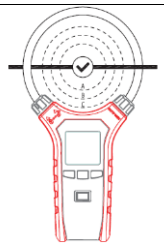
	100mm (3.94 inches)	The accuracy at the current range is increased by 2.0%	Area B	
	150mm (5.91 inches)	The accuracy at the current range is increased by 2.5%	Area C	

*.Frequency response: 45Hz～500Hz
*.Overload protection: Unspecified
*.Accuracy guarantee range: 10%～100% of range
*.The offset is ≤5 counts when there is no input to the coil.
*.Surge current measurement: The trigger value of the surge current at 100A position is 5A, and the trigger time is within about 100ms.

uni-trend.vn

6. Resistance measurement

Range	Resolution	Accuracy
600.0Ω	0.1Ω	±(1.0%+5)
6.000kΩ	0.001kΩ	±(2.0%+5)
60.00kΩ	0.01kΩ	
600.0kΩ	0.1kΩ	
6.000MΩ	0.001MΩ	±(2.5%+5)
60.00MΩ	0.01MΩ	±(3.0%+5)

*.Range: Measured value = Displayed value - Value of shorted test leads
*.Overload protection: 600Vrms (DC/AC)
*.Accuracy guarantee range: 1%～100% of range

7. Power measurement

Function	Range	Resolution	Accuracy	Remark
Active power	60.00kW	0.01	±(3.5%+5）	When the displayed power factor is not equal to 1, the power
	600.0kW	0.1		
	3600kW	1		
Apparent power	60.00kVA	0.01	±(3.5%+5）	
	600.0kVA	0.1		

	3600kVA	1		specification is calculated based on the phase angle error.
Reactive power	60.00kVar	0.01	±(3.5%+5）	
	600.0kVar	0.1		
	3600kVar	1		
Power factor	-1～1	0.001		Calculate the power factor specification based on the phase angle error.
Phase angle	-360°～360°	0.1	±2°	

*.Frequency response: 50Hz～60Hz
*.Overload protection: 1000Vrms (DC/AC)
*.Voltage input amplitude: ≥30Vrms
Current input amplitude: ≥5A

8. Frequency measurement

Range	Resolution	Test sensitivity	Accuracy
Measurement range of voltage frequency: 10.0Hz～30.0kHz	0.1Hz～0.1kHz	10.0Hz～30.0kHz	±(0.5%+3)
Measurement range of current frequency: 45Hz～1000Hz	1Hz	45Hz～1000Hz	±(0.5%+3)

*.Overload protection: 600Vrms (DC/AC)
*.Frequency position: Voltage frequency≤30kHz, 3Vrms≤input amplitude≤240Vrms
Current frequency≤1000Hz, input amplitude≥1A

9. Electric energy measurement

Range	Resolution	Accuracy
0.0Wh～999.9Wh	0.1	±(3.5%+5)
1kWh～3600kWh	1	

*.Frequency response: 50Hz～60Hz
*.Overload protection: 1000Vrms (DC/AC)
*.Voltage input amplitude: ≥30Vrms
Current input amplitude: ≥5A

uni-trend.vn

12、Bluetooth Software

1. Introduction

The Bluetooth Software is a mobile APP, currently supporting mobile phones running on the operating systems of iOS 10.0 or newer and Android 5.0 or newer. Other operating systems are subject to the released application software.

2. Download “UNI-T Smart Measure” (iDMM2.0）

1） For Android

Option 1: Search for "UNI-T Smart Measure" on the official website of Uni-Trend.

Option 2: Open your mobile phone browser and scan the following QR code.

2）For iOS

Option 1: Search for "UNI-T Smart Measure" in the "App Store".

Option 2: Turn on the scanning function of your mobile phone system and scan the following QR code.

Android iOS

uni-trend.vn

3. Use

1）In power-off state, long press “HOLD” and “INRUSH” simultaneously to power on the Meter. If the display shows BLE, it indicates that the Bluetooth of the Meter has been turned on.

2）Tap the APP icon to turn on the “UNI-T Smart Measure” software and enter the navigation interface. In the list of devices to be connected, select the device name "UT281F" and Tap Connect.

13、Maintenance and Repair (Figure 6)

⚠ **Warning:** Before opening the back cover or battery cover of the Meter, please ensure that the power is turned off, and the test leads have been removed from the input terminals and the circuit under test

1. General maintenance and repair

- Clean the Meter housing with a damp cloth and mild detergent. Do not use abrasives or solvents.
- In case of any abnormality in the Meter, please stop use and send it for maintenance.
- The calibration and repair must be performed by qualified professional maintenance personnel or designated service center.

2. Install or replace batteries

The specification of the built-in battery of this Meter is: AAA battery

When the LCD shows the low battery symbol, please replace the built-in batteries immediately, otherwise it will affect the measurement accuracy.

Please install or replace the battery according to the following steps:

a. Power off the Meter and remove the test leads from the input terminal.

b. Turn the Meter face down, loosen the screws at battery compartment, remove the battery cover, take out the old batteries, and install new batteries according to the polarity indication.

c. Rejoin the battery cover and tighten the batteries.

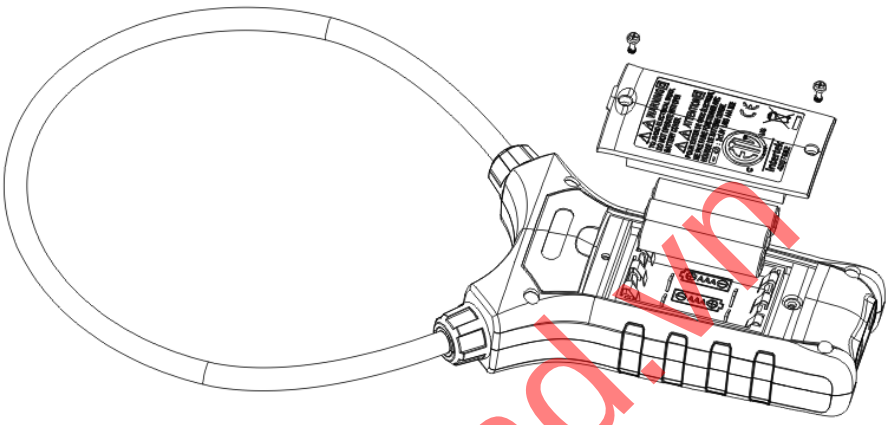

Figure 6

uni-trend.vn

UNIT
Uni-Trend Technology (China) Co., Ltd.
Address: No. 6, Industrial North 1st Road, Songshan Lake Park, Dongguan City, Guangdong Province.
Post Code: 523 808
Tel: (86-769) 8572 3888
http：//www.uni-trend.com